Linear Balanced Audio Driver With MFB Low-Pass 44kHz Filter scheme. R load=10 kOhms.

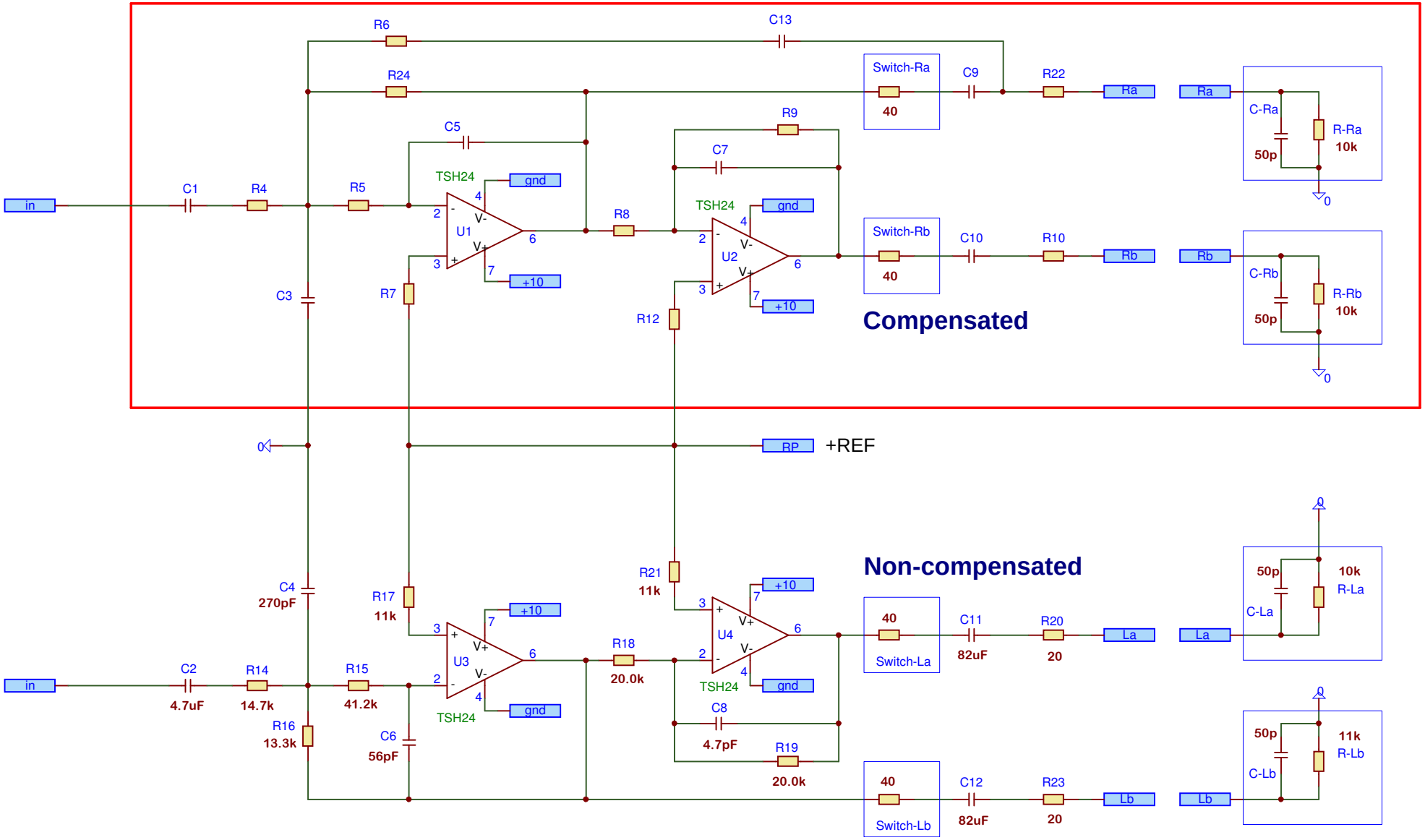

WWW.LAPAYEV.COM